ENGAGE® SPREADCONTROL

INSTALLATION MANUAL

Document revision: 1.4

Last revised: February 23, 2023

IntelligentAg™

INNOVATION CENTER

a division of AGTEGRA™ COOPERATIVE

Engage® SpreadControl Installation Manual

Intelligent Agricultural Solutions, 1810 NDSU Research Circle North, Fargo, ND 58102 USA.

Visit us online at intelligentag.com/support
Questions? E-mail us at info@intelligentag.com

Record of Revision

Revision Number	Change Description	Revision Date	Inserted By
0.1	Prototype release	4/29/19	AAL
0.2	Updated hardware for POC3	8/29/19	AAL
1.0	Initial production release	7/01/20	AAL
1.1	Updated wiring diagram	7/15/20	AAL
1.2	Updated tool list, PM4X hardware list and bracket install procedures, conveyor drive manifold procedures, and wiring diagram. Added harnessing steps.	10/23/20	AAL
1.3	Added lock washers to conveyor drive manifolds, added control node caps, updated main system harness connections, updated harness diagram.	10/5/21	AAL
1.4	Updated Intelligent Ag logo, updated gateway part number, hardware, and drawing, updated PM4 and bracket part number	2/23/23	AAL

Table of Contents

1. Getting Started

CAUTION: Remove the battery disconnect switch key and fold the booms up before beginning installation.

1.1. About Engage® SpreadControl

Engage SpreadControl is a retrofit section control system for your floater. The system communicates with your floater's existing GPS mapping system to prevent overlap by opening and closing sections on your floater.

1.2. Compatible Floaters

Engage SpreadControl can be installed on the following models of TerraGator Air Max Precision floaters:

- TG7300/TG7300B
- TG8300/TG8300B
- TG8400/TG8400B
- TG9300B

NOTE: Engage SpreadControl is not currently compatible with TerraGator C Series floaters.

1.3. Required Tools and Equipment

You will need the following tools and equipment to install Engage SpreadControl:

- Crescent wrench
- Dry cloth
- 9/16” wrench and socket
- 7/16” wrench (qty. 2) and socket
- 15/16” wrench
- 7/8” wrench
- Pick, breaker bar, and penetrating fluid (optional for uninstalling existing manifold)
- Torque wrench
- M13 socket
- Wire cutter
- Electrical tape
- Deutsch terminal removal tool or small screwdriver
- Raven hardware/software (from a Raven dealer)
    - Cable Adapter Viper 4 to 3 Pin ISO Bus (1-115-0172-247)
    - ISO Section Control Unlock (1-077-0180-149)
    - Kit Viper 4+ W/O GPS Single/Multi VRA (1-117-5010-010BM)

1.4. Installation Overview

- ☐ Install the gateway
- ☐ Install PM4s
- ☐ Install motor-mounted conveyor drive manifolds
- ☐ Install funnel boxes
- ☐ Connect harnessing
- ☐ Configuring Machine Settings and Calibrating Funnel Boxes

NOTE: Detailed wiring diagrams are found in Appendix A.

2. Installing the Gateway

The gateway is a computing platform that sends data to the VT.

Number of Times Performed

Once per system

Required Tools and Equipment

- 7/16” wrench (qty. 2) (for gateway mounting bracket)
- 9/16” wrench (for U-bolts)

Required Parts

Part name	Part number	Quantity
Gateway 260	153010-000085	1
¼” flat washer	352012-000002	8
U-bolt	352013-000007 or 356060-000152	2
Gateway mounting bracket	353070-000079	1
3/8" locknut (for square u-bolt)	356060-000094	4
3/8" washer (for square u-bolt)	356060-000239	4
¼" nut	356060-000241	4
¼-20 x 2-1/2” screw	356060-000303	4

Installation Location

Mount the gateway between the cab and bins. The mounting location must be at least 8 inches (20 cm) away from the operator to ensure safe operation.

Installing the Gateway

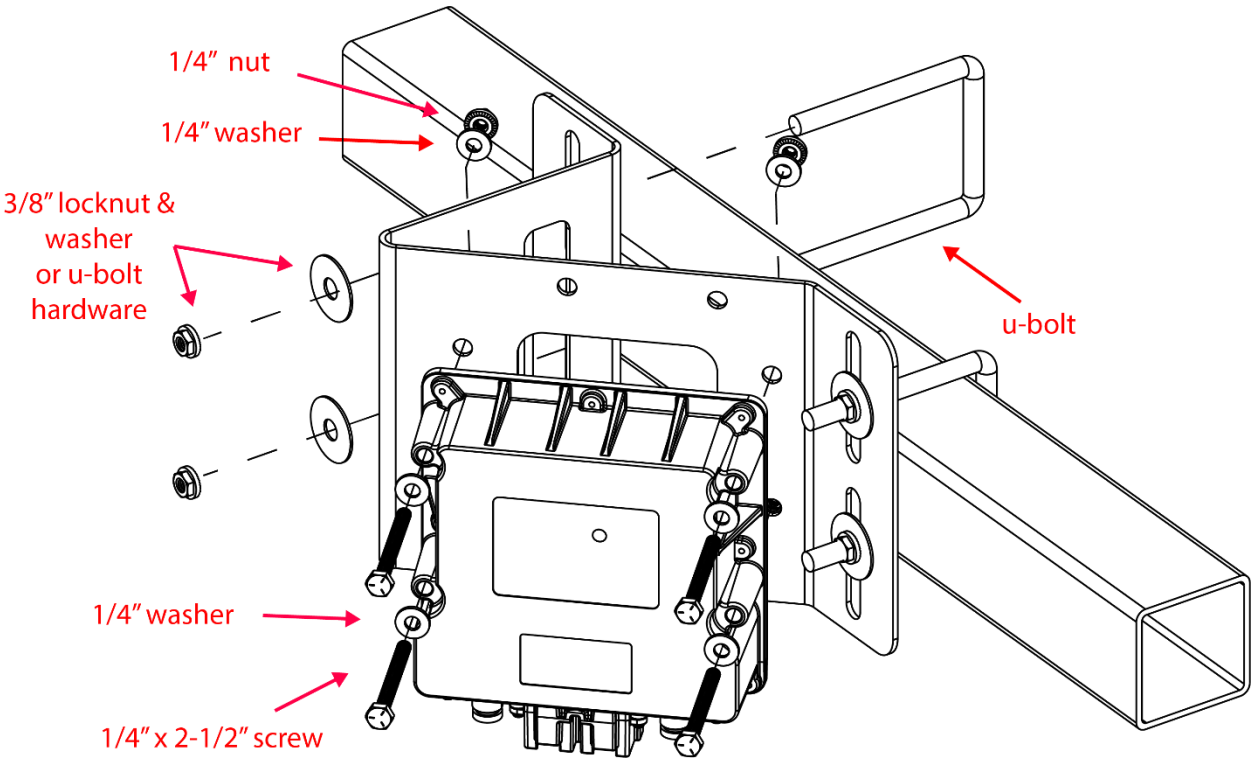

1. Position the gateway on the mounting bracket so that the connectors face down when the bracket is mounted on the beam. If another orientation must be used, the connectors should not face up.

   NOTE: The text on the gateway label will be upside down.

2. Secure the gateway to the mounting bracket using the provided screws, washers, and nuts as shown in the image above.
3. Mount the bracket to the beam using u-bolts and the provided nuts.

3. Installing the Wi-Fi Antenna

The Wi-Fi antenna sends information from the SpreadControl system to the VT.

Number of Times Performed

Once per system

Required Tools and Equipment

- Wrench set

Required Parts

Part name	Part number	Quantity
SMA cap	251015-000139	2
SMA terminator jack	251015-000272	1
Wi-Fi antenna	252005-000010	1
U-bolt	352013-000007 or 356060-000152	2
Antenna bracket	353070-000083	1
3/8" locknut (for square u-bolt)	356060-000094	4
3/8" washer (for square u-bolt)	356060-000239	4

Installation Location

Mount the Wi-Fi antenna on the bin between the cab and bins. Mount it at least 2 feet (60 cm) away from the operator and at least 8 inches (20 cm) from the gateway to ensure safe operation.

If you don't have a beam behind the cab, find a beam within 6 feet of the cab that has line of sight to the cab.

Installing the Wi-Fi Antenna

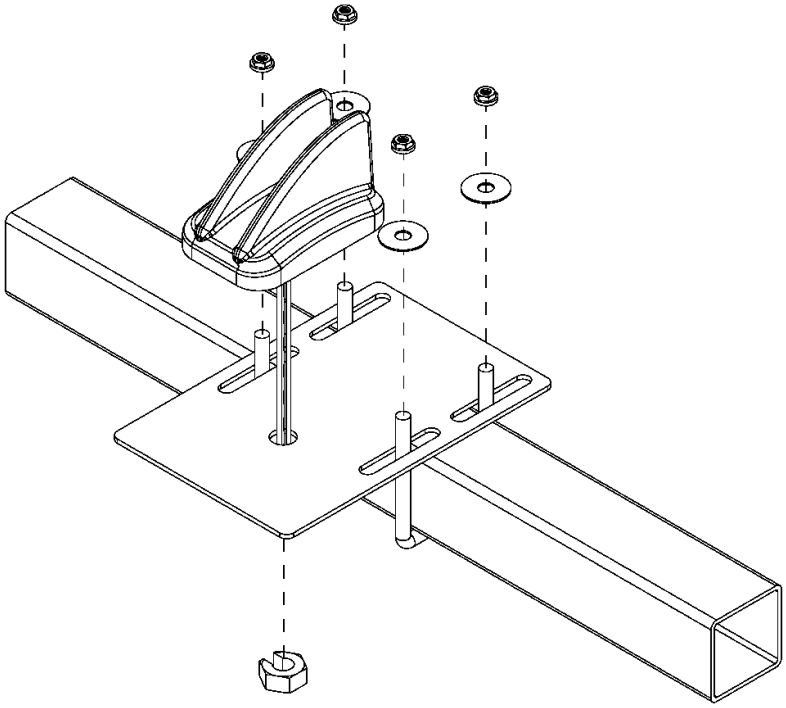

1. Thread the Wi-Fi antenna cables through the hole in the mounting bracket and through the nut. Tighten the nut to secure the antenna to the bracket. Do not over-torque.
2. Mount the bracket on a beam behind the cab using the u-bolts and locknuts. If you don't have a beam behind the cab, find a beam within 6 feet of the cab that has line of site to the cab.
3. Connect the Cellular Main and Wi-Fi/BT antenna cables to the gateway.

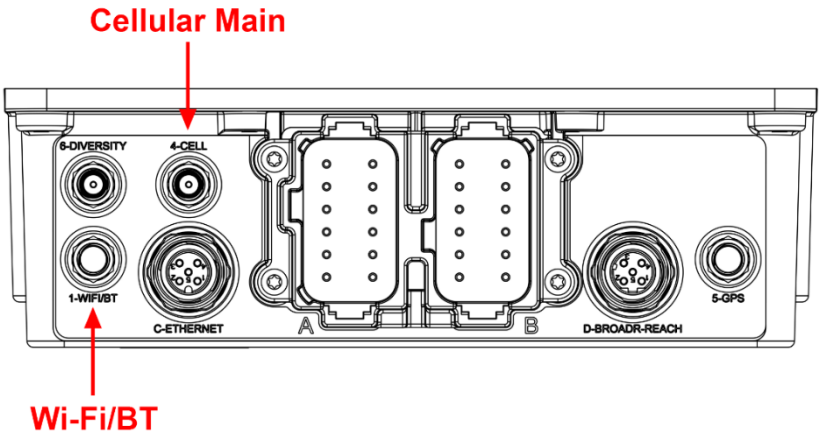

4. Cap the 433 MHz antenna cable with the SMA terminator jack. Zip-tie the cable to the other cables.
5. Cover connectors 5 and 6 with the provided caps.

Routing Loose Harnessing

Coil any loose harnessing around a hydraulic line or existing electrical wire and ensure that harnessing will not get pinched when you fold the booms up. Secure all harnessing to the implement using cable ties.

4. Installing PM4s

The PM4s control the system.

Number of Times Performed

One to three times per system (once per bin)

Required Tools and Equipment

- 9/16” wrench and socket (for PM4 bolts)
- 7/16” wrench and socket (for bracket mounting bolts)

Required Parts

Part name	Part number	Quantity
PM4Y	153510-000172	3
PM4 Bracket	353070-000528	1
3/8” x 3-3/4” Bolt	356060-000029	6
1/4" x 1-1/4" Bolt	356060-000074	4
1/4" Lock Nut	356060-000075	8
1/4" Washer	356060-000173	4

Installation Location

Installed on the outside of the control box where the Raven controllers are located.

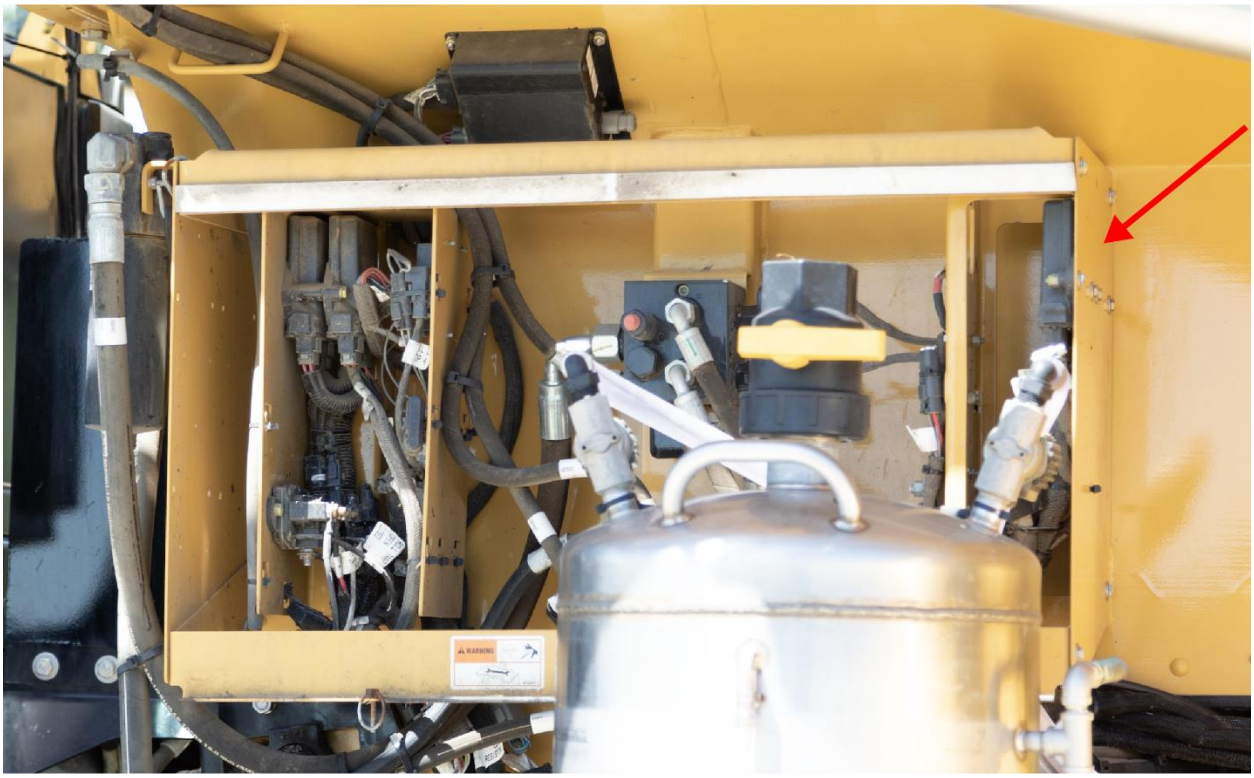

Installing PM4s

1. Remove the chute covers from the main control box.

2. Position the PM4s on the bracket as shown in the image below so that the serial number is visible. It doesn't matter which PM4 is installed in which location.

   NOTE: The text on the PM4 label will be upside down.

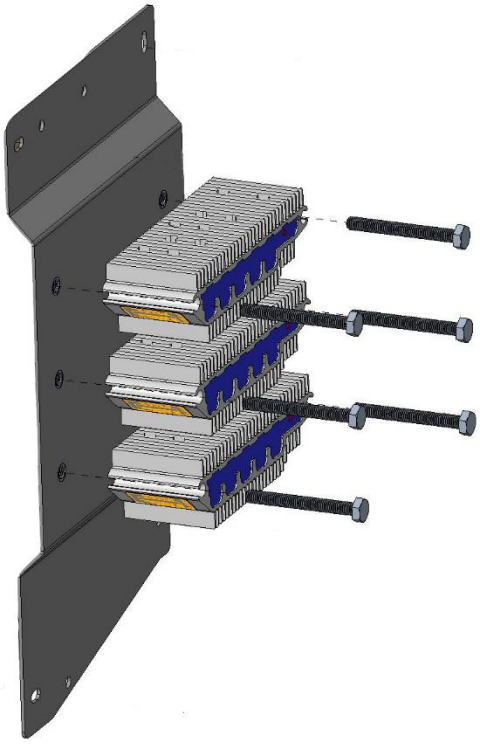

3. Thread a bolt through the sides of each unit and the mounting plate.

4. Remove the four corner screws and their hardware on the control box shown below. Save the nuts for installing the bracket in the next step.

5. Thread the provided screws through the control box so that the threads face outwards, then install in this order on each screw: existing nut, bracket, washer, new nut. Hand-tighten a nut to secure the bracket.

   NOTE: Do not install the bracket cover until the harnessing is complete in Section 8.

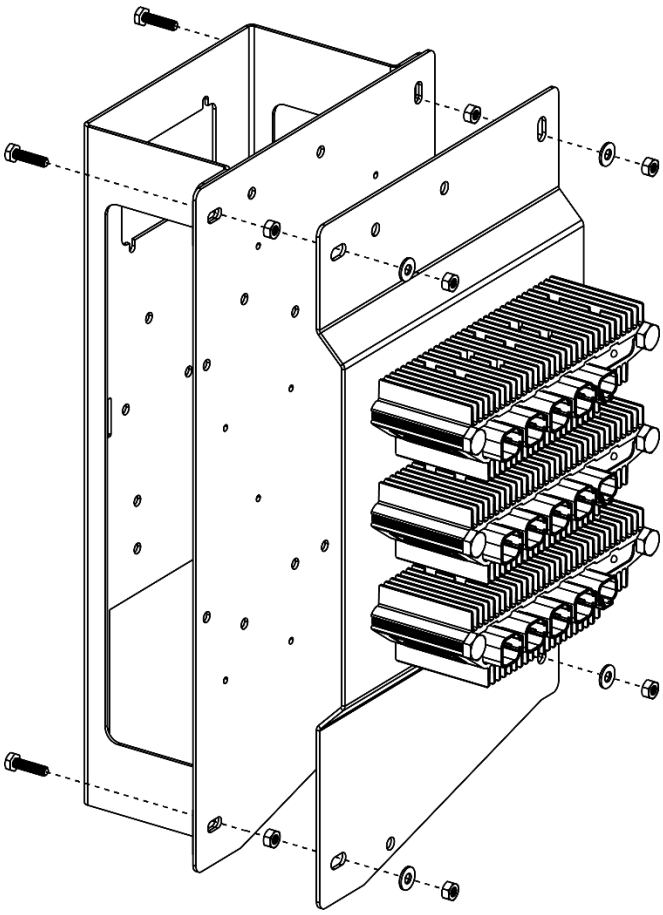

5. Installing Motor-Mounted Conveyor Drive Manifold

The motor-mounted conveyor drive manifold controls the rate of the conveyors and the flow rate of material.

Number of Times Performed

Two or four times per system (twice for one bin system, four times for two bin system)

Required Tools and Equipment

- 15/16” wrench (for hydraulic fitting)
- 7/8” wrench (for hydraulic fitting)
- Pick, breaker bar, and penetrating fluid (optional for uninstalling existing manifold)
- M13 socket
- Torque wrench

Part name	Part number	Quantity
Left motor-mounted conveyor drive manifold	353070-000345	2
Right motor-mounted conveyor drive manifold	353070-000346	2
Hydraulic Plugs	Shipped with manifold	4
Mounting Bolts	Shipped with manifold	8
Lock Washers	Shipped with manifold	8
O-rings	Shipped with manifold	2

Installation Location

Installed on the back right and back left side of the floater where the factory bypass manifolds are located.

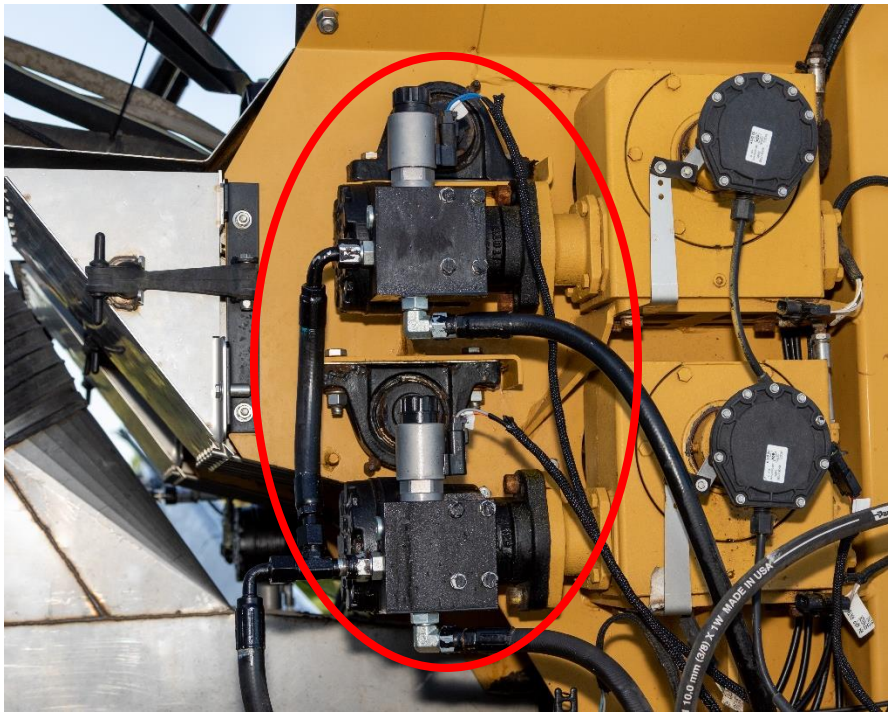

5.1. Removing Existing Manifold

1. Make note of which hydraulic line connects into each fitting of the existing bypass manifolds. Disconnect the two hydraulic lines and plug the lines.
2. Uninstall the four mounting bolts from the existing bypass manifolds and remove the manifolds and the o-rings behind them.

   NOTE: You may need to use a breaker bar, penetrating fluid, or paint might need to be scraped off of the mounting bolt heads in order to remove them.

5.2. Installing Engage® SpreadControl Manifolds

Identify the left manifold and the right manifold using the pictures below.

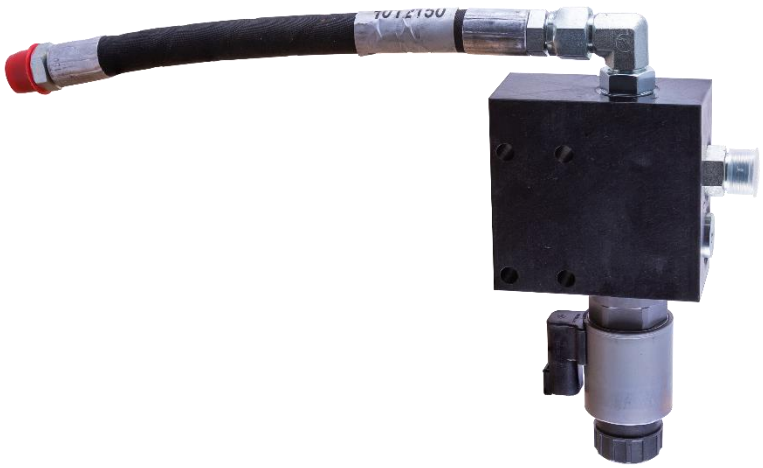

Left manifold
(hose on top)

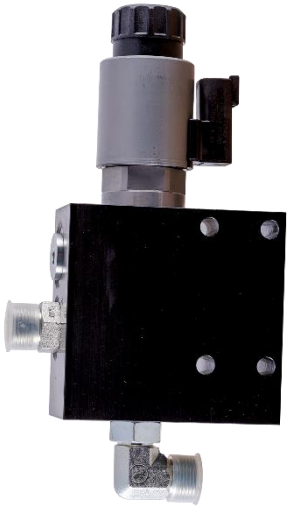

Right manifold
(hose on bottom)

Installing Left Manifolds

1. Install a new o-ring in the area that you removed the old one, then position the manifolds as shown in the image above. **Make sure that the o-ring between the manifold and conveyor drive is properly seated.**
2. Secure each manifold to the conveyor drive using the 4 bolts and lock washers provided with the manifold. Torque in a star pattern to 22 ft-lbs.
3. Re-connect the two hydraulic lines to each manifold's top hose extension and right side fitting.

Installing Right Manifolds

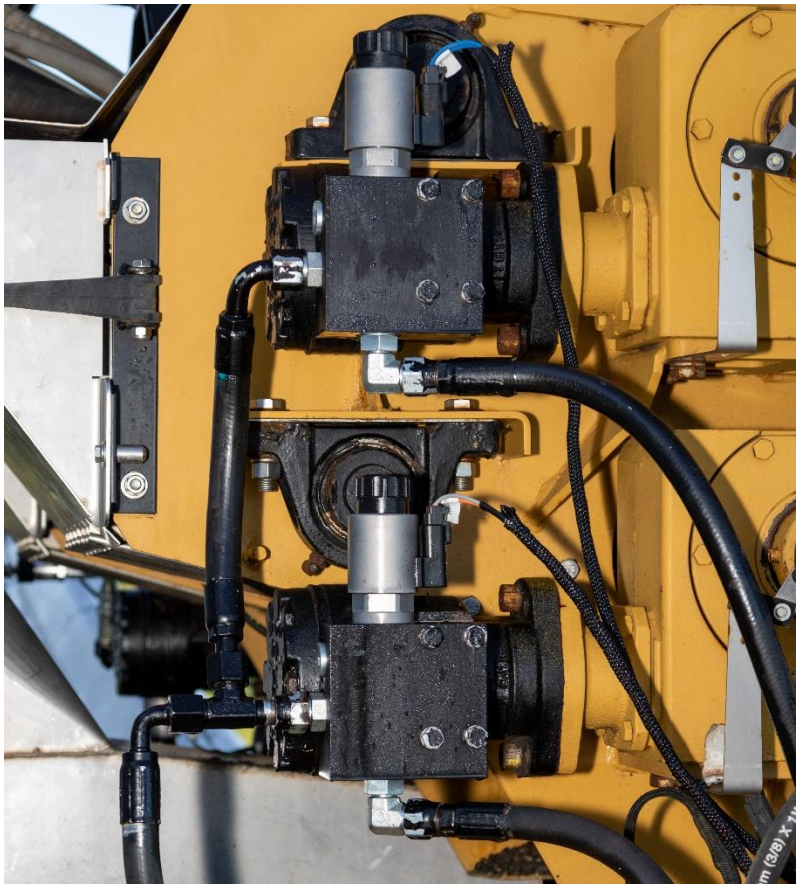

1. Install a new o-ring in the area that you removed the old one, then position the manifolds as shown in the image above. **Make sure that the o-ring between the manifold and conveyor drive is properly seated.**
2. Secure each manifold to the conveyor drive using the 4 bolts and lock washers provided with the manifold. Torque in a star pattern to 22 ft-lbs.
3. Re-connect the two hydraulic lines to each manifold's bottom fitting and left side fitting.
4. Check the seal to make sure that there are no leaks.

6. Installing Funnel Boxes

CAUTION: The Engage® SpreadControl funnel box is heavy. Use proper precautions such as steel toe boots and gloves. Lifting and installing the box may require two people.

The Engage SpreadControl funnel boxes open and close individual sections to control the flow of product on each side of the floater.

Number of Times Performed

Twice per system

Required Tools and Equipment

- Pliers
- Dry cloth

Required Parts

Part name	Part number	Quantity
Right funnel box	153510-000141	1
Left funnel box	153510-000144	1
Dielectric grease	350550-000006	varies
Actuator	353070-000309	2
Actuator pin	353070-000311	4
Zip ties	356070-000062	100

Installation Location

Replaces the factory funnel boxes in the back of the floater.

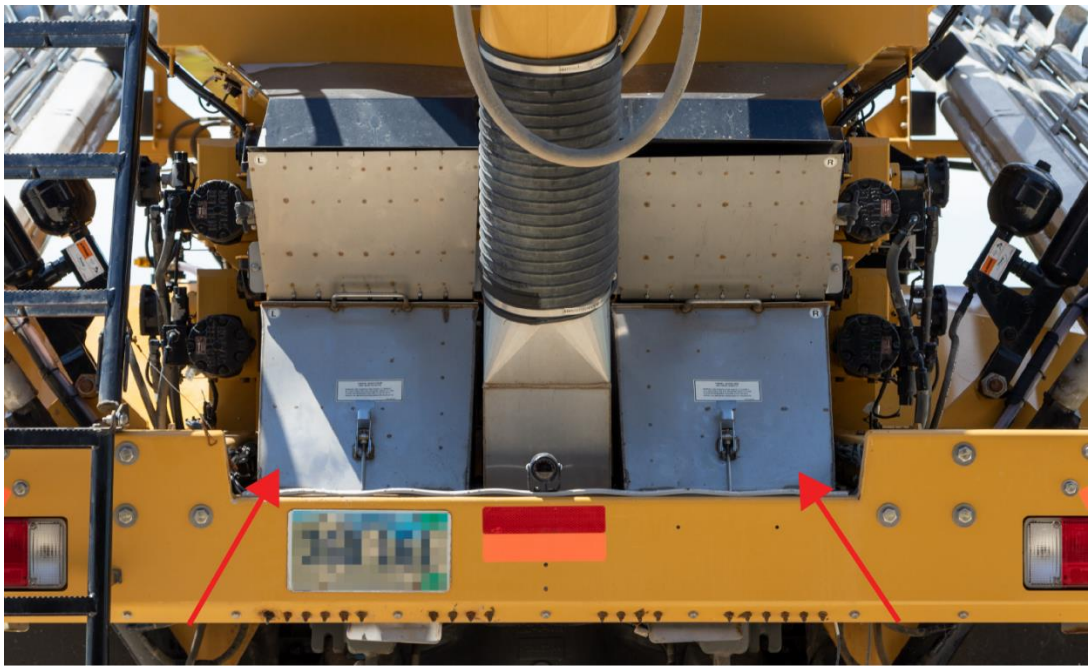

6.1. Removing Factory Funnel Boxes

Undo the latch on the existing funnel boxes. Pull the boxes out.

6.2. Installing the Funnel Box Actuators

1. Apply dielectric grease on the two actuator connectors.
2. Install zip ties around the cables and the actuator so that the cables stay in the grooves on the actuator.

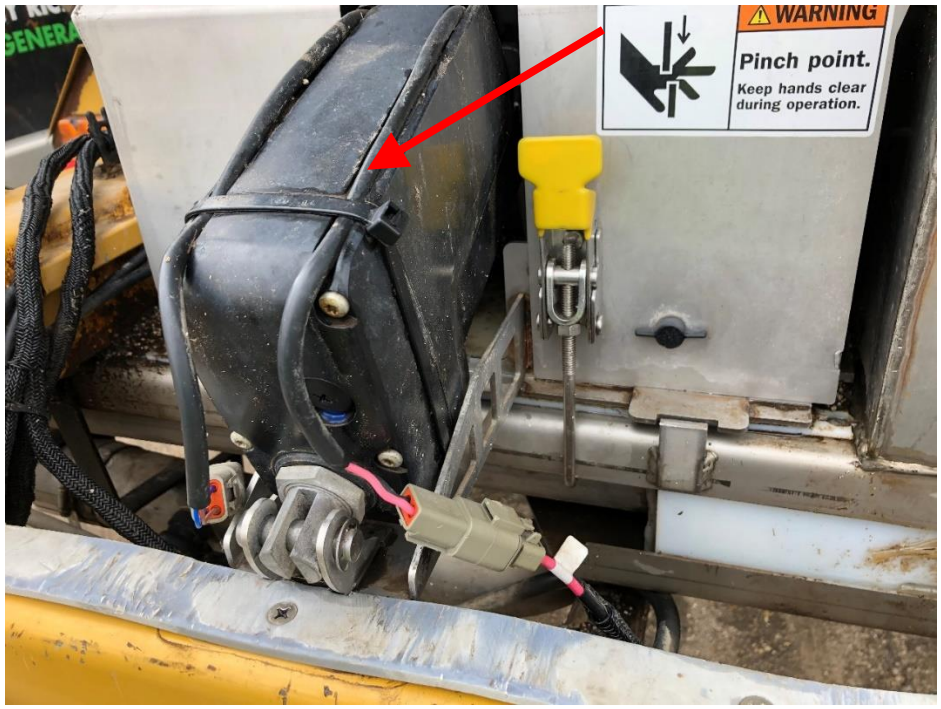

3. Unscrew the four thumb screws from the cover and remove the cover.

WARNING: Pinch point. Use caution when moving the funnel box pivot.

4. Connect the actuator to the funnel box with two pins.
   a. Install a pin through the base of the actuator and base of the funnel box.
   b. Pull the pivot of the funnel box toward you and install a pin through the front of the actuator and the pivot.

5. Install a snap ring on the end of each pin.
6. Re-place the covers on the funnel boxes and re-install the four screws.

   IMPORTANT: If the screw holes on the cover don't align with the screw holes on the base, make sure that you are using the correct cover. Do not modify the box.

6.3. Installing the Engage® SpreadControl Funnel Boxes

1. Clean any fertilizer or other debris off of the plate that the funnel box sits on.
2. Orient the funnel box as shown in the left image below. Slide the box in until the tab on the front of the box lines up with the tab on the front of the plate, as shown in the right image below.

   Make sure that the left funnel box is installed on the left side, and that that the right funnel box is installed on the right side. Look at the sticker or latch location to identify each box:

   - If the latch is on the left side, it's the right box.
   - If the latch is on the right side, it's the left box.

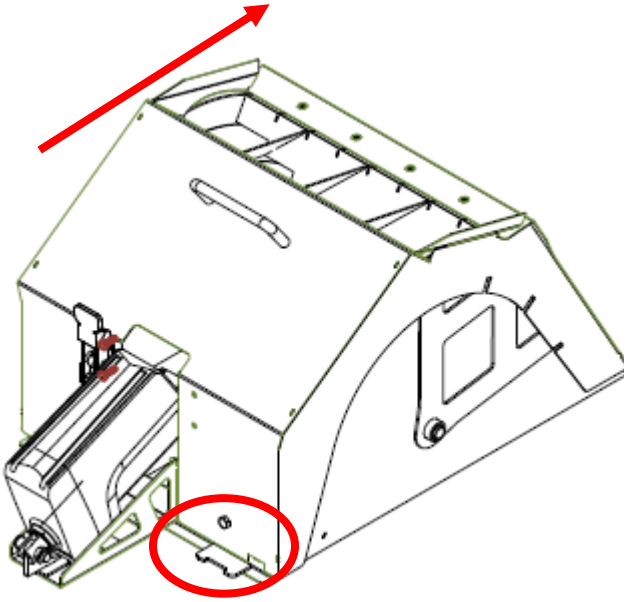

3. Hook the latch under the front of the plate. If needed, change the length of the latch by adjusting the nut.

7. Installing Section Switches

The section switches allow you to manually open and close the bins.

Number of Times Performed

Once per system

Required Tools and Equipment

- Screwdriver

Required Parts

Part name	Part number	Quantity
Section switch	254570-000019	2

Installation Location

Installed in the switch bay.

Installing the Section Switches

1. Pry out the two blank switches shown in the image above.
2. Install the provided switches so that the green light is on the bottom half of the switch. Make sure to plug the switch in all the way so the locking tabs engage.

8. Connecting Harnessing

Number of Times Performed

Once per system.

Required Tools and Equipment

- Wire cutter
- Electrical tape
- Deutsch terminal removal tool or small screwdriver (for master apply and micronutrient clutch connections)
- Cable Adapter Viper 4 to 3 Pin ISO Bus (1-115-0172-247) (only for machines that did not come factory installed with a Raven Viper 4)

Required Parts

Part name	Part number	Quantity
Control Node Cap (Key A)	153510-000207	3*
Control Node Cap (Key B)	153510-000208	3*
Control Node Harness Cap (Key A)	251015-000341	3*
Control Node Harness Cap (Key B)	251015-000342	3*
Dielectric Grease	350550-000006	varies
Main System Harness	353050-000065	1
Bin 1 Harness	353050-000066	1
Bin 2 Harness*	353050-000067	1
Actuator Power Harness	353050-000068	1
Micronutrient Harness*	353050-000069	1
PM4 Bracket Cover	353070-000374	1
Zip Ties	356070-000062	100
Connector Caps	use caps from new wire harnesses	6

*Optional / quantity varies depending on system configuration

8.1. Connecting Harnessing

Refer to the instructions below and the wiring diagram in Appendix A to connect harnessing.

NOTE: “Left” and “Right” references refer to their respective directions when sitting in the cab facing forward. Bin 1 is the bin closest to the cab, and Bin 2 is behind it.

NOTE: When disconnecting existing harnessing, cap the connectors using the caps from the new harnessing.

Disconnecting Raven Single Product Control Nodes

1. Disconnect the harnesses from the Raven Single Product Control nodes in the following places:
   - Bin 1 and bin 2 nodes in the control panel.
   - Micronutrient bin node in the left rear of the machine.

   NOTE: If you do not have a bin 2 or micronutrient bin, you will not have those nodes.
2. Place caps on the disconnected harnesses and control nodes.

Connecting the Main System Harness

1. Apply dielectric grease on all harness connectors.

2. Connect **S4** of the Main System harness to **Bank 5** of the VT.

   NOTE: If your machine did not come factory installed with a Raven Viper 4, you may need the adapter harness listed on page 26.

3. Connect **S3** of the Main System harness to the **ground stud** in the right rear panel of the cab, and connect **S2** of the Main System harness to the **power stud** in the same panel.

   NOTE: Leave S17 disconnected for now. You will connect it to the Bin 1 harness later.

4. Connect **S19** of the Main System harness to the **accessory outlet** in the cab.

5. Connect **S1** of the Main System harness to **connector A** of the gateway.
6. Connect **S16** of the Main System harness to **connector B** of the gateway.

7. Connect **S7** of the Main System harness to **bank 0** (4 pin connector) of the Bin 1 (top) PM4.

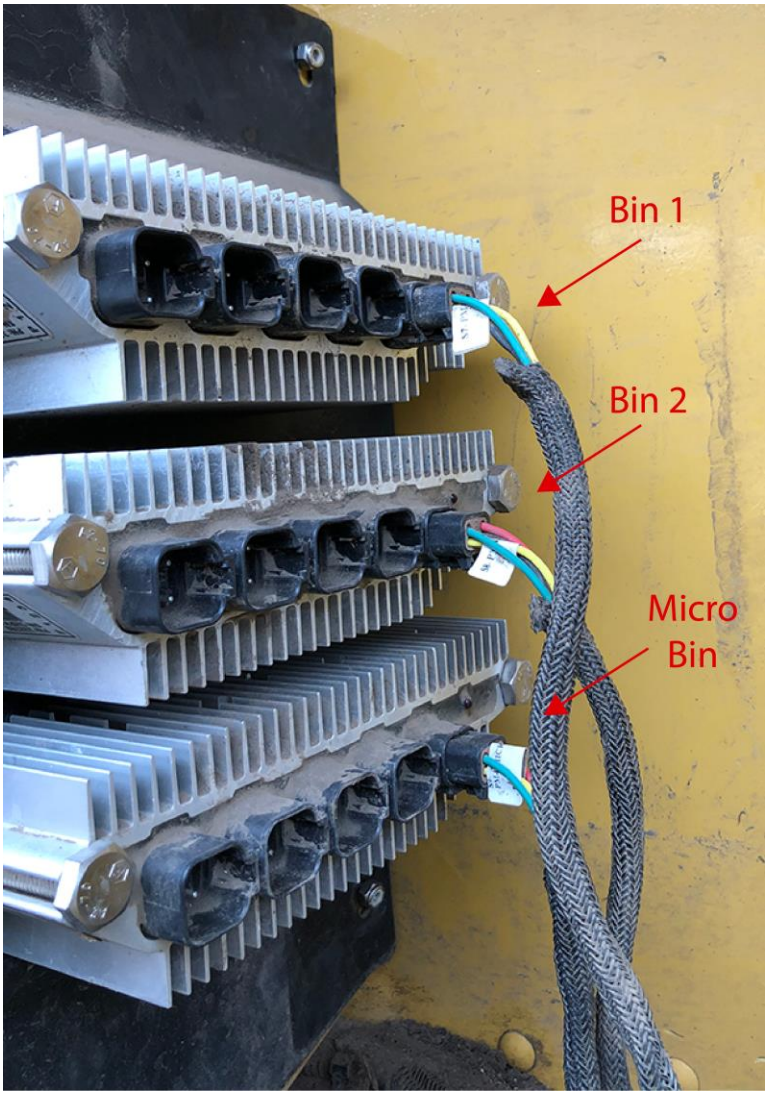

8. Connect **S8** of the Main System harness to **bank 0** (4 pin connector) of the Bin 2 (middle) PM4. If you don't have a Micronutrient bin, leave this connector capped.

9. Connect **S9** of the Main System harness to **bank 0** (4 pin connector) of the Micronutrient bin (bottom) PM4. If you don't have a Bin 2, leave this connector capped.

10. Connect **S6** of the Main System harness to the **4 pin communication connector** of the left funnel box.

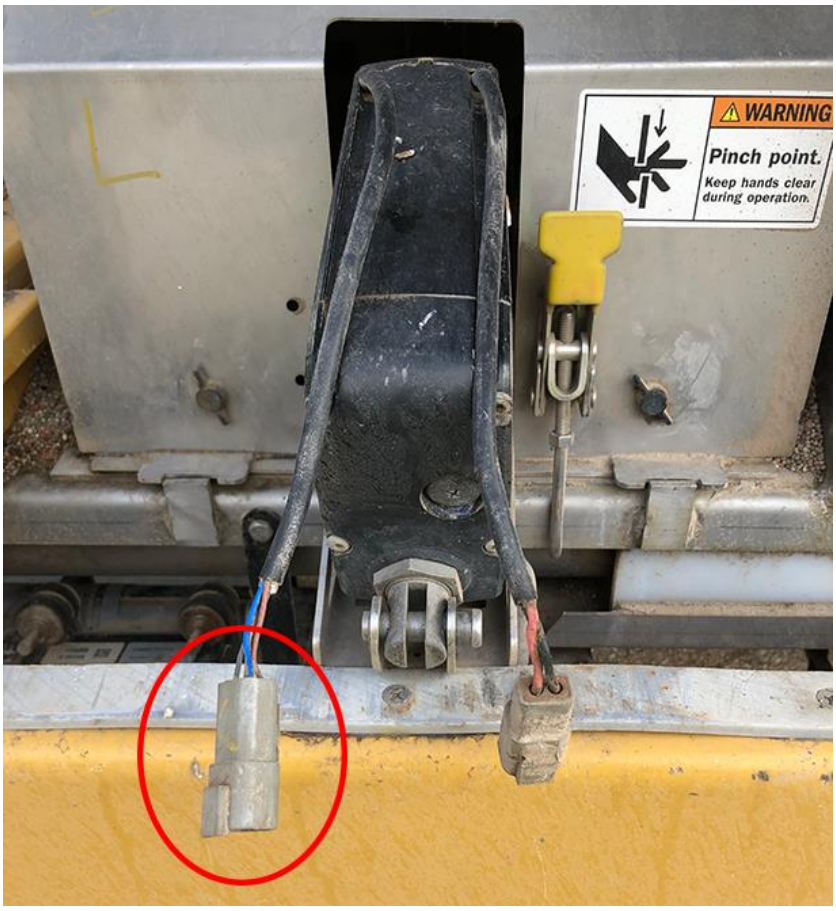

11. Connect **S5** of the Main System harness to the **4 pin communication connector** of the right funnel box.

Connecting the Bin 1 Harness

1. Apply dielectric grease on all harness connectors.

2. Disconnect the existing harnesses from the Section T connector in the right rear panel of the cab. Then, connect **B5** and **B14** of the Bin 1 harness to the **Section T connector** and **Master Module connector**.

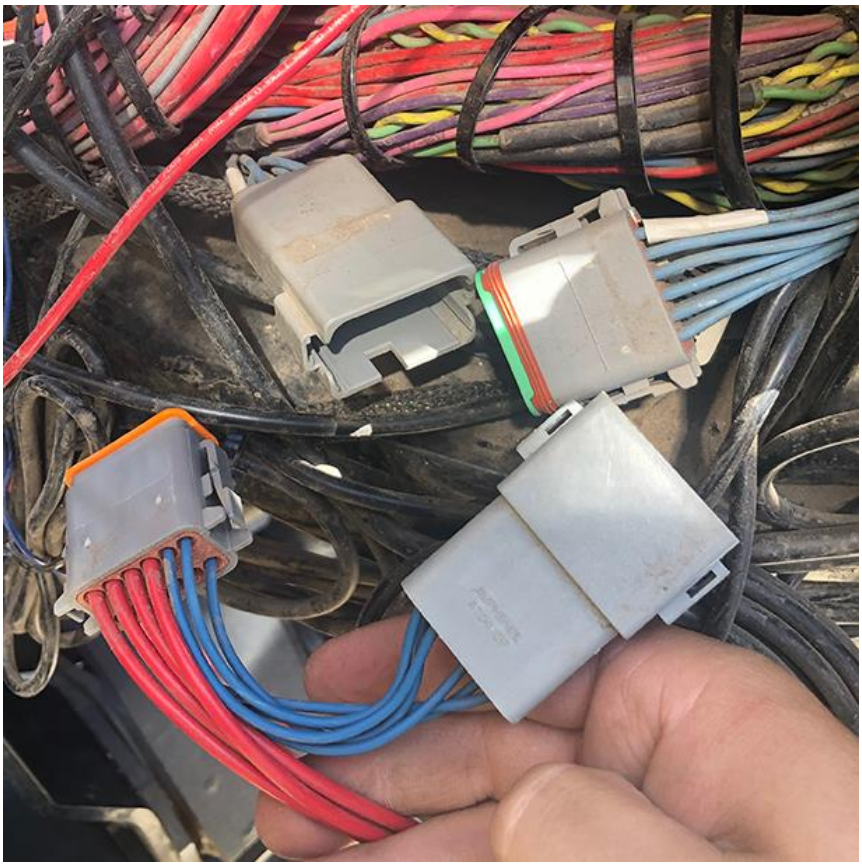

3. Connect **B15** of the Bin 1 harness to **S17** of the Main System harness.

4. Disconnect and cap the harness from the **top solenoid connector** of the existing rate valve on Bin 1. Then, connect **B6** of the Bin 1 harness to the open connector.

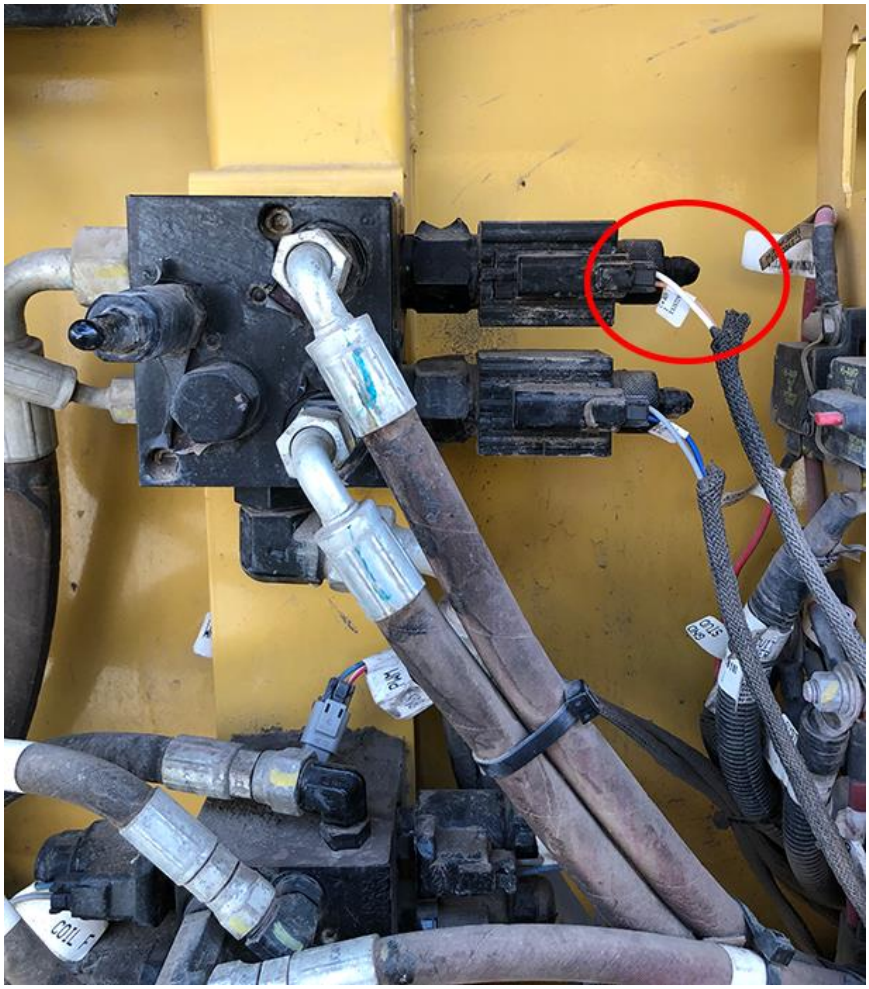

5. Connect **B1** of the Bin 1 harness to **Bank 1** of the Bin 1 PM4.
6. Connect **B2** of the Bin 1 harness to **Bank 2** of the Bin 1 PM4.
7. Connect **B3** of the Bin 1 harness to **Bank 3** of the Bin 1 PM4.
8. Connect **B4** of the Bin 1 harness to **Bank 4** of the Bin 1 PM4.

9. Disconnect and cap the harnesses from the **existing 3-pin connector** of the Bin 1 left side bin level sensor. Then, connect **B7** of the Bin 1 harness to the open connector.

10. Disconnect and cap the harness from the **existing 3-pin connector** of the Bin 1 left side encoder (bottom encoder). Then, connect **B9** of the Bin 1 harness to the open connector.

11. Connect **B8** of the Bin 1 harness to the **2-pin connector** of the newly installed Bin 1 left side conveyor drive manifold. Cap the existing harness.

12. Disconnect and cap the harness from the **existing 3-pin connector** of the fan speed sensor. Then, connect **B10** of the Bin 1 harness to the open connector.

13. Connect **B11** of the Bin 1 harness to the **2-pin connector** of the newly installed Bin 1 right side conveyor drive manifold. Cap the existing harness.

14. Disconnect and cap the harness from the **existing 3-pin connector** of the Bin 1 right side encoder (bottom encoder). Then, connect **B12** of the Bin 1 harness to the open connector.

15. Disconnect and cap the harness from the **existing 3-pin connector** of the Bin 1 right side bin level sensor. Then, connect **B13** of the Bin 1 harness to the open connector.

Connecting the Actuator Power Harness

1. Apply dielectric grease on all harness connectors.

2. Connect **A1** of the Actuator Power harness to the **power stud** in the right rear panel of the cab.

3. Connect **A2** of the Actuator Power harness to the **ground stud** in the right rear panel of the cab.

4. Connect **A3** of the Actuator Power harness to the **2-pin power connector** on the right funnel box.

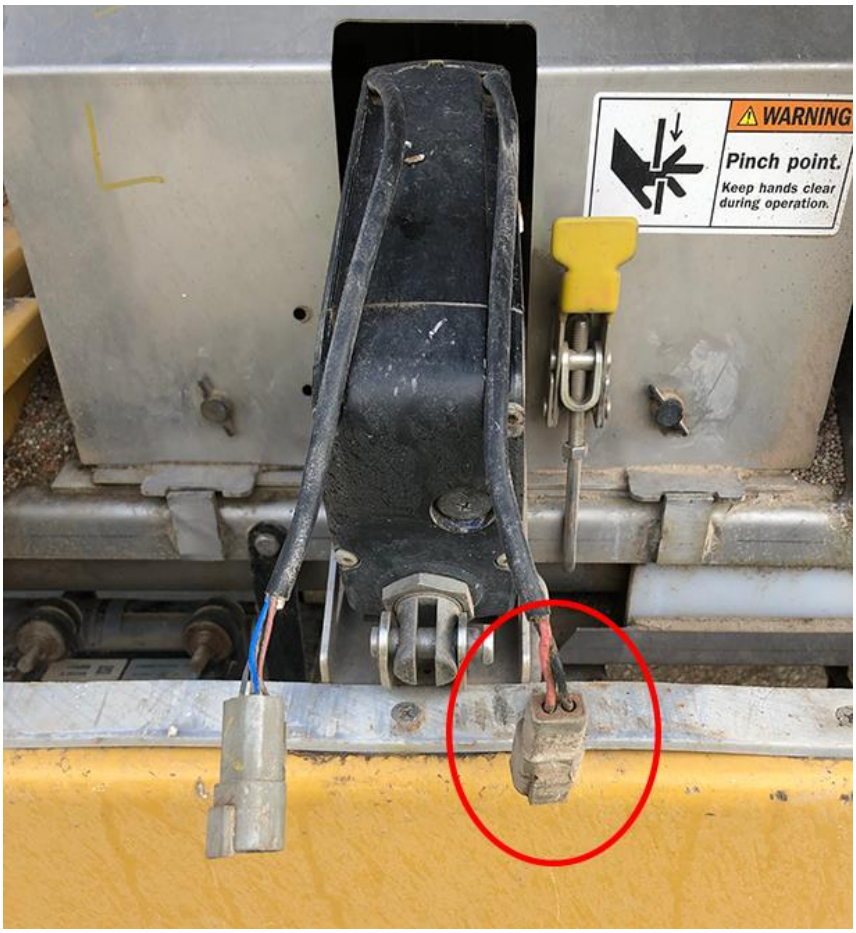

5. Connect **A4** of the Actuator Power harness to the **2-pin power connector** on the left funnel box.

Connecting the Bin 2 Harness (Optional)

NOTE: You will not have this harness if you only have one bin.

1. Apply dielectric grease on all harness connectors.

2. Disconnect and cap the existing harness from the **bottom solenoid connector** of the existing rate valve on Bin 2. Then, connect **C4** of the Bin 2 harness to the open connector.

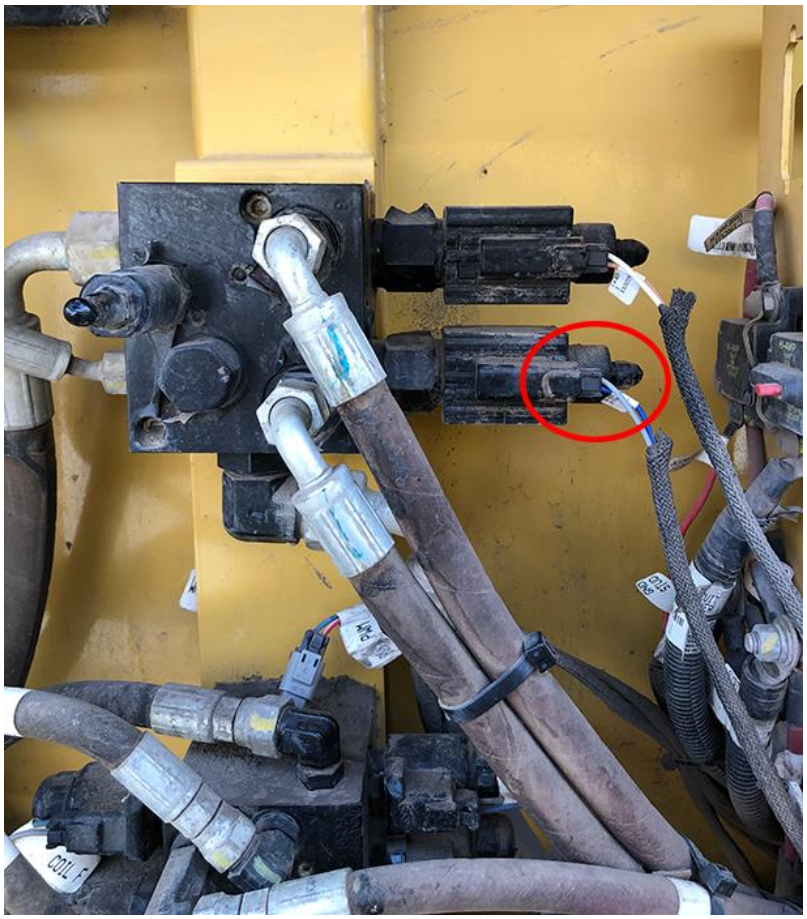

3. Connect **C1** of the Bin 2 harness to **Bank 1** of the Bin 2 PM4.

4. Connect **C2** of the Bin 2 harness to **Bank 2** of the Bin 2 PM4.

5. Connect **C3** of the Bin 2 harness to **Bank 3** of the Bin 2 PM4.

6. Connect **C11** of the Bin 2 harness to **Bank 4** of the Bin 2 PM4.

7. Disconnect and cap the harness from the **existing 3-pin connector** of the Bin 2 left side bin level sensor. Then, connect **C5** of the Bin 2 harness to the open connector.

8. Disconnect and cap the harness from the **existing 3-pin connector** of the Bin 2 left side encoder (top encoder). Then, connect **C7** of the Bin 2 harness to the open connector.

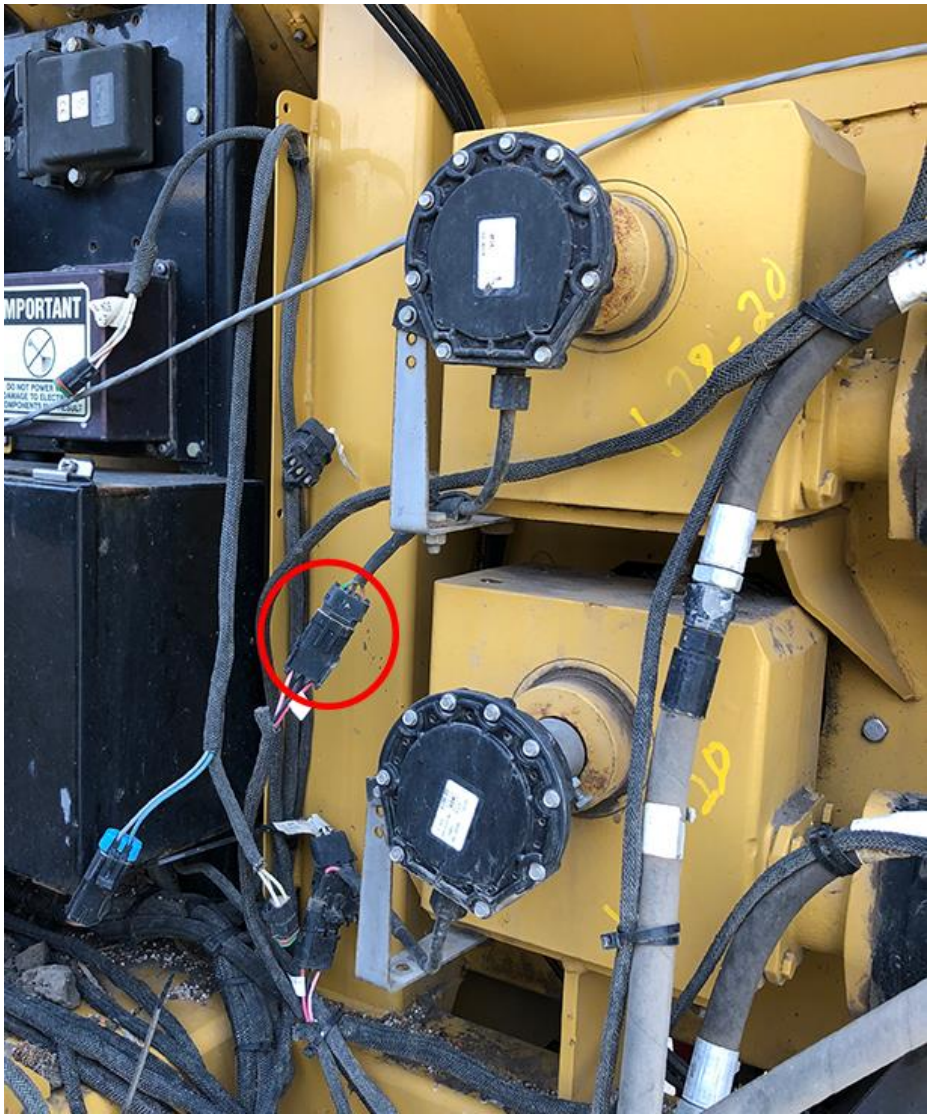

9. Connect **C6** of the Bin 2 harness to the **2-pin connector** of the newly installed Bin 2 left side conveyor drive manifold. Cap the existing harness.

10. Connect **C8** of the Bin 2 harness to the **2-pin connector** of the newly installed Bin 2 right side conveyor drive manifold. Cap the existing harness.

11. Disconnect and cap the harness from the **existing 3-pin connector** of the Bin 2 right side encoder (top encoder). Then, connect **C9** of the Bin 2 harness to the open connector.

12. Disconnect and cap the harness from the **existing 3-pin connector** of the Bin 2 right side bin level sensor. Then, connect **C10** of the Bin 2 harness to the open connector.

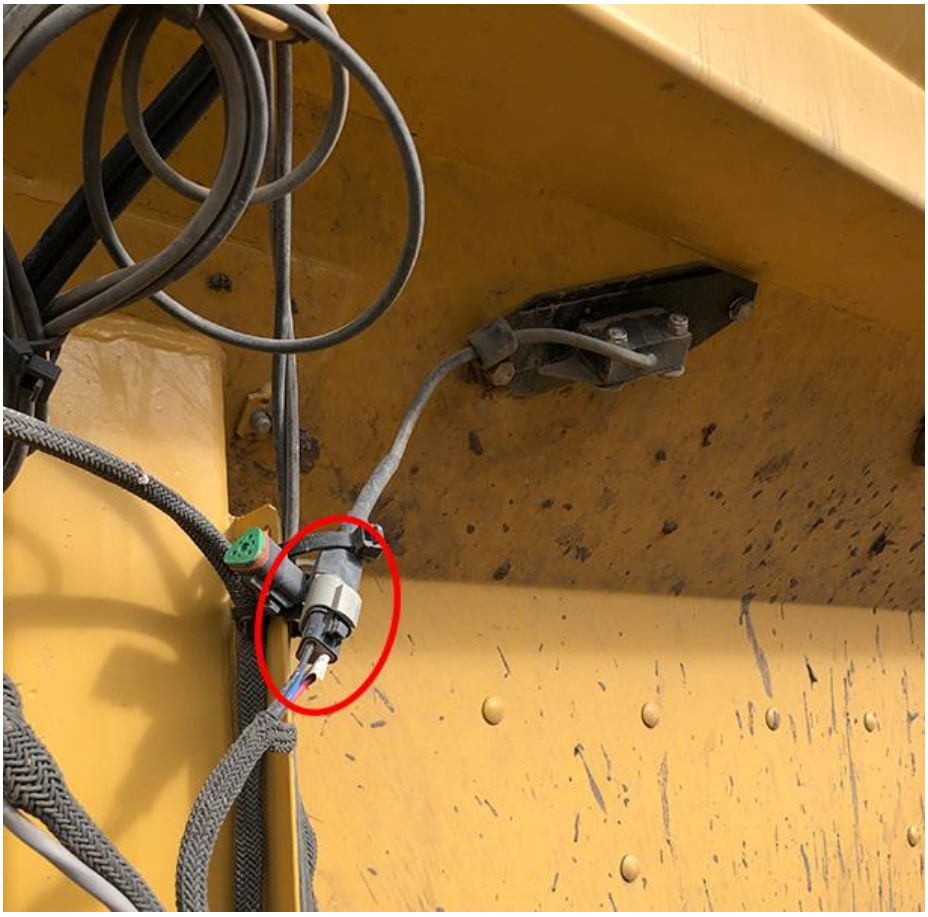

Connecting the Micronutrient Bin Harness (Optional)

NOTE: You will not have this harness if you do not have a micronutrient bin.

1. Apply dielectric grease on all harness connectors.
2. Connect **M1** of the Micronutrient harness to **Bank 1** of the Micronutrient Bin PM4.
3. Connect **M2** of the Micronutrient harness to **Bank 2** of the Micronutrient Bin PM4.
4. Connect **M3** of the Micronutrient harness to **Bank 3** of the Micronutrient Bin PM4.
5. Disconnect and cap the harness from the **existing 1-pin connector** of the Micronutrient Bin motor control driver. Then, connect **M4** of the Micronutrient harness to the open connector.

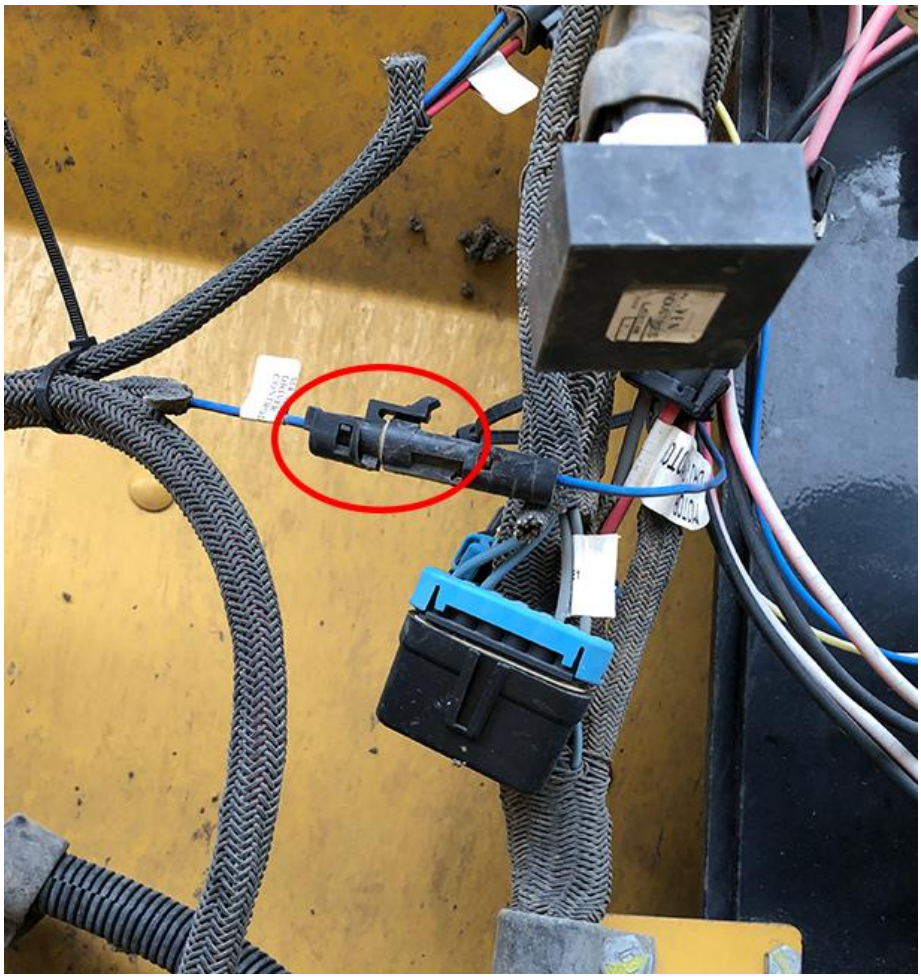

6. Disconnect and cap the harness from the **existing 3-pin connector** of the Micronutrient Bin left side bin level sensor. Then, connect **M5** of the Micronutrient harness to the open connector.

7. Remove **Pin B** of the Micronutrient left clutch in the Micronutrient control panel and wrap it with electrical tape. Install pin **M6** of the Micronutrient harness into the open Pin B spot.

8. Disconnect and cap the harness from the **3-pin existing connector** of the Micronutrient motor encoder. Then, connect **M7** of the Micronutrient harness to the open connector.

9. Remove **Pin F** of the Micronutrient right clutch in the Micronutrient control panel and wrap it with electrical tape. Install pin **M9** of the Micronutrient harness into the open Pin F spot.

10. Disconnect and cap the harness from the **existing 3-pin connector** of the Micronutrient Bin right side bin level sensor. Then, connect **M8** of the Micronutrient harness to the open connector.

8.2. Routing Harnessing

Route harnessing in the areas below and zip tie to the machine every few feet.

- **Actuator power harness:** Route under the machine along the hydraulic lines.
- **All other harnessing:** Route along the existing harnessing over the wheel well.

8.3. Installing the PM4 bracket cover

1. Remove the nuts and washers from the four corner bracket screws.
2. Install the bracket cover over the PM4s.
3. Re-install the original washers and nuts onto the screws.

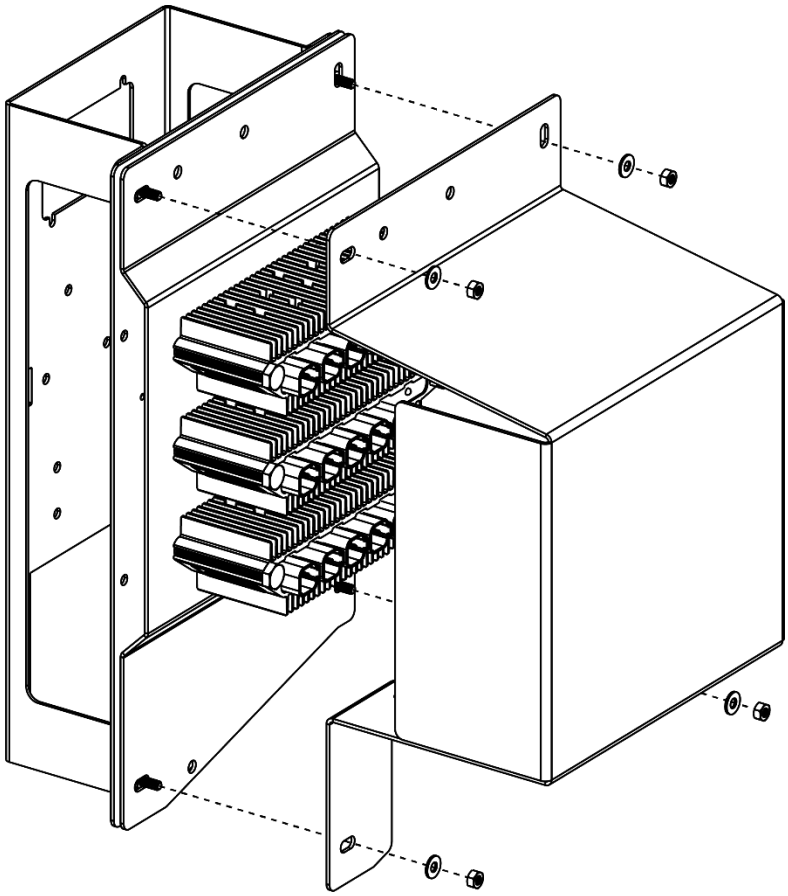

9. Configuring Settings and Calibrating Funnel Boxes

The Engage® SpreadControl VT app interfaces with the Engage SpreadControl system. Refer to the Engage SpreadControl Operator's Guide to set up and use the system.

Appendix A:
Harness Diagram